REVISION RECORD				
REV.	DESCRIPTION	ECN No.	APPROVED	DATE
V0	--			2021.08.25

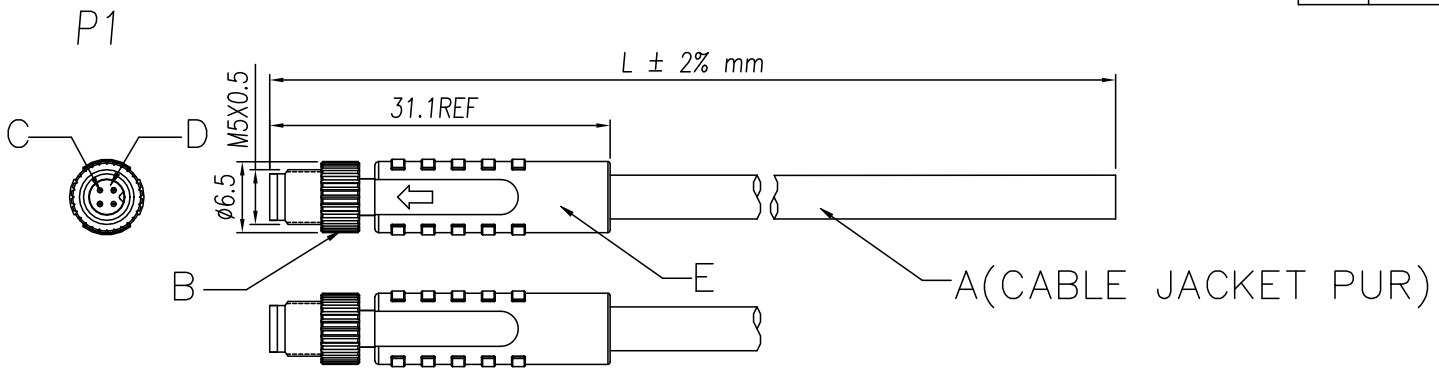

IEC 技术参数 IEC Technical Data	IEC61076-2-105
工作温度 Operating temperatur [°C]	-25~+80
防护等级 IP Class (IN Locked condition)	IP67
额定电压 Rated Voltage [V]	60
额定电流 Rated Current [A]	1
导线截面积Conductor cross section 硬质/柔性导线 Solid/ flexible [mm²]	0.14
接线范围 Wire Range 单/多芯线 Solid/Stranded [AWG]	26
材 料 Material	
绝缘材料 Insulation Material	PA 66
阻燃等级 Imflammability	UL94V-0
导体材料 Contactor Material	铜合金 Copper alloy
导体镀层 Contactive Coating	镀金 Gold Plated
螺母/螺丝Connector Nut/Screw	Brass With Nickel Plated铜镀镍
符合RoHS环保要求	

Contacts Pin数	3Pin	4Pin
Coding编码	4● ●3 1● A-Coding	4● ●3 1● ●2 A-Coding
Rated Current 额定电流	1A	1A
Rated Voltage 额定电压	60V	60V
Wire Range线范围	26AWG	26AWG
PART NO.品名(1.0M):	M05-A03-ST0-M02-BCR-100N	M05-A04-ST0-M02-BCR-100N
PART NO.品名(2.0M):	M05-A03-ST0-M02-BCR-200N	M05-A04-ST0-M02-BCR-200N
PART NO.品名(3.0M):	M05-A03-ST0-M02-BCR-300N	M05-A04-ST0-M02-BCR-300N
PART NO.品名(5.0M):	M05-A03-ST0-M02-BCR-500N	M05-A04-ST0-M02-BCR-500N
Custiomized.定制化:	.....	.....

3Pin

P1	Wirelist
1	brown
3	blue
4	black

4Pin

P1	Wirelist
1	brown
2	White
3	blue
4	black

编号 No.	料号 Materials.No	品名 Name	材料规格 Description	单位 Unit	用量 Qty
E		TPU	Molded With Black TPU	G	5
D		Housing	A-Coding Male,Black PA66	pcs	1
C		Terminal	Male Terminal ,Brass With Gold Plated	pcs	X
B		Screw	Screw M5X0.5,Brass With Nickel Plated	pcs	1
A		Cable	UL2464 26AWG Black PUR Jacket	mm	XXX

慈溪市万捷电子有限公司
CIXI WANJIE ELECTRONIC CO., LTD

PART NO.: M05-AXX-ST0-M02-BCR-XXXN

NO SPECIFIED TOLERANCE			Cus' P/N:			Order No :	---		Drawing No.:	SP-02-M000XX
LINEAR	0.5~6	±0.1	DES.	JUN	DATE		UNITS	mm	THIRD ANGLE PROJECTION	PAGE
	6~30	±0.2	CHK.		DATE		SIZE	A4		1 of 1
	>30	±2%	APP.		DATE		SCALE	X:X	文件等级:外部公开	
ANGLES	±1°									